T5: Diffusion models

and how we can use them

Week 5

German Barquero

germanbarquero@ub.edu

Generative models

Session 1 February 16	Task 1.a: Object detection
Session 2 March 2 (*)	T1.b: Object Segmentation
Session 3 March 16	Task 2: Image Captioning (1)
Session 4 March 23	Task 2: Image Captioning (2)
Session 5 April 13	Task 3: Diffusion models (1)
Session 6 April 20	Task 3: Diffusion models (2)
Session 7 April 27	Final presentation

EASTER HOLIDAYS (March 30 – April 6)

Deliverable: Report Image Captioning (1)

Deliverable: Report Image Captioning (2)

Generative models

Diffusion models represent a **huge breakthrough in computer vision**.

Their excellent capabilities to **generate high-quality and diverse data** have unlocked many possibilities. Among them:

- ➔ **Image generation** → digital artists, marketing, social media, illustration…
- ➔ **Video generation** → cinema industry, social media, advertisement, …
- ➔ **3D generation** → gaming industry, virtual try-on, virtual reality, …
- ➔ **Others** → new drugs discovery, **data augmentation**, medical imaging…

Generative models

This week, we aim at answering the following **research question**:

Q. Can we generate **synthetic text-image pairs** to improve the performance of our image captioning models?

Text-to-image retrieval

(from last week…)

Image captioning: The objective consists in describing the content of an image.

Image Encoder: Any pre-trained model that can generate visual representations for an image

Common encoders:

- CLIP ViT encoder
- VQ VQA encoder
- None! Just feed image pages directly through the Multimodal Projector

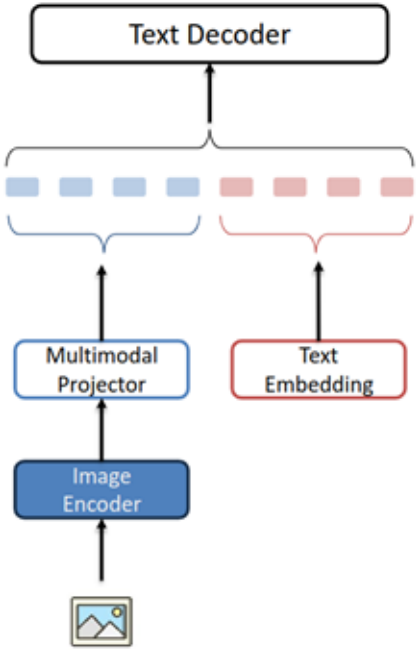

Generative models

This week, we aim at answering the following **research question**:

Q. Can we generate **synthetic text-image pairs** to improve the performance of our image captioning models?

Possible directions (not limited to these):

- ➔ Improving dataset imbalance
- ➔ Bias mitigation
- ➔ Generic non targeted data augmentation (balanced and unbiased datasets)

Generative models

Cautions with Synthetic Text–Image Data

- Can introduce **noise and errors**
- May **differ from real-world data** (covariate shift bias)
- Can **reinforce biases** if not controlled
- **Costly** to generate and filter
- Etc

Generative models

Example #1 of data imbalance: only 5 images with cartoon-ish style in the training dataset, and the captioning model fails with them on the test set.

anime style

nvinkpunk style

Generative models

Example #2 of data imbalance: captioning model doesn't describe well the content of smartphone screenshots.

Generative models

Example of bias mitigation: 90% of images of astronauts are in the space, and the captioning model fails for 10% of test samples where astronauts are in other scenarios.

Latent diffusion models

However, generating data with standard diffusion models in pixel-space is costly.

We will focus instead on using latent diffusion models (LDMs). The most popular open-source models are the ones from Stable Diffusion.

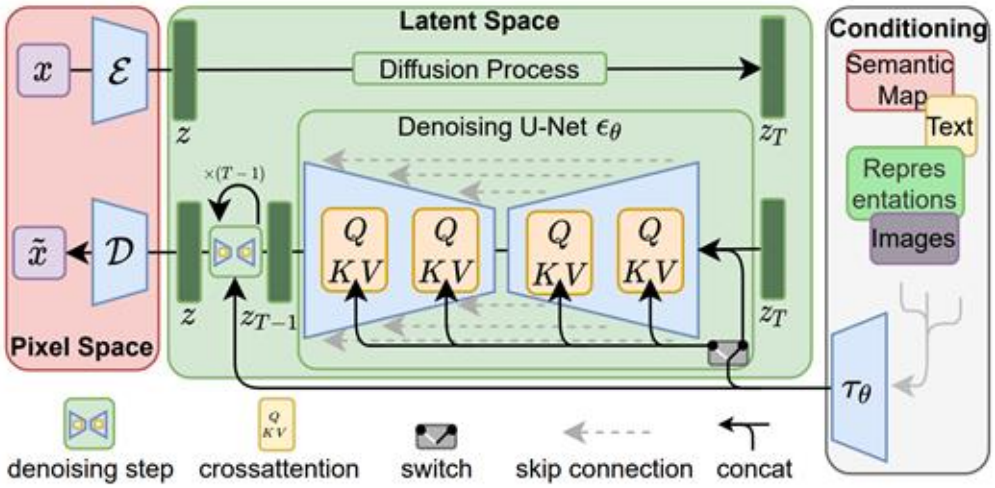

C5 - T5: Resources

Tutorials

Diffusers tutorial: https://huggingface.co/blog/stable_diffusion
Diffusers documentation: https://huggingface.co/docs/diffusers/v0.32.2/en/index

Model Zoo

(latent diffusion)
Stable-diffusion 2.1: https://huggingface.co/stabilityai/stable-diffusion-2-1
Stable-diffusion 2.1 turbo: https://huggingface.co/stabilityai/sd-turbo
Stable-diffusion XL: https://huggingface.co/stabilityai/stable-diffusion-xl-base-1.0
Stable-diffusion XL turbo: https://huggingface.co/stabilityai/sdxl-turbo

(**latent diffusion + flow matching / adversarial distillation**)
Stable-diffusion 3.5: https://huggingface.co/stabilityai/stable-diffusion-3.5-medium
Stable-diffusion 3.5 Large Turbo: https://huggingface.co/stabilityai/stable-diffusion-3.5-large-turbo

C5 - T5: Resources

Examples

Using the 🤗's Diffusers library to run Stable Diffusion 2 in a simple and efficient manner.

```
pip install diffusers transformers accelerate scipy safetensors
```

Running the pipeline (if you don't swap the scheduler it will run with the default DDIM, in this example we are swapping it to DPMSolverMultistepScheduler):

```
import torch
from diffusers import StableDiffusionPipeline, DPMSolverMultistepScheduler

model_id = "stabilityai/stable-diffusion-2-1"

# Use the DPMSolverMultistepScheduler (DPM-Solver++) scheduler here instead
pipe = StableDiffusionPipeline.from_pretrained(model_id, torch_dtype=torch.float1
pipe.scheduler = DPMSolverMultistepScheduler.from_config(pipe.scheduler.config)
pipe = pipe.to("cuda")

prompt = "a photo of an astronaut riding a horse on mars"
image = pipe(prompt).images[0]

image.save("astronaut_rides_horse.png")
```

C5 - T5: Resources

Fairness-aware human analysis

Data augmentation with Stable Diffusion

```
ages = [60, 65, 70, 75, 80]
races = ["afroamerican", "chinese", "caucasian"]
genders = ["man", "woman"]
```

```
prompt = (
    f"a realistic face photograph of a {age} year old "
    f"{race} {gender}, high detail, natural lighting, neutral expression"
)
```

C5 - T5: Resources

➔ The documentation will help you reach total control over the generation process, linking with the concepts we learned last week.

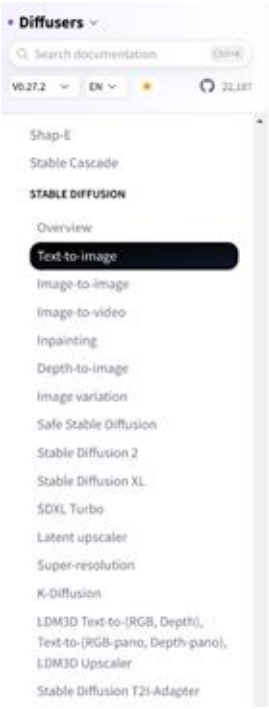

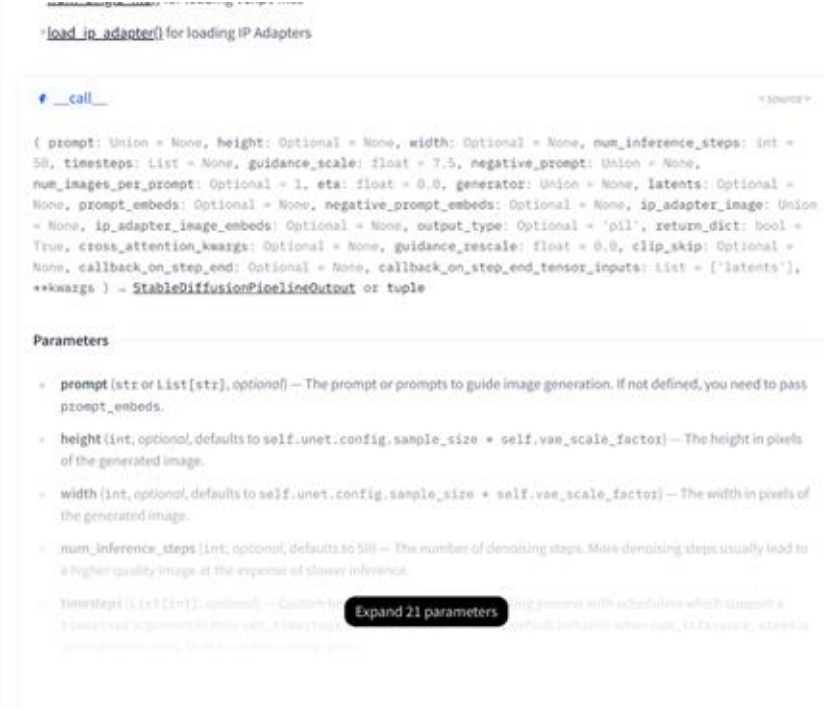

C5 - T5: Resources

➔ **IMPORTANT**: mind your resources! You have restrictions of time and compute, so anticipate the time that the image generation process will take for the aimed scale of your synthetic dataset.

GPU Device	VRAM (GB)	Stable Diffusion 3.5 Medium (2.5B)	SDXL (6.5B including refiner)	Playground v2.5 (3.5B)	AuraFlow v0.2 (8.7B)	Stable Diffusion 3.5 Large / Large Turbo (8.1B)	FLUX.1 [dev] (12B)	FLUX.1 [schnell] (12B)
NVIDIA GeForce RTX 4060	8	!	!	!	!	!	!	!
NVIDIA GeForce RTX 3080	10	✓	!	!	!	!	!	!
NVIDIA GeForce RTX 3060 NVIDIA GeForce RTX 4070 AMD Radeon RX 7700 XT	12	✓	!	!	!	!	!	!
NVIDIA GeForce RTX 4060 Ti NVIDIA GeForce RTX 4070 Ti NVIDIA GeForce RTX 4080 AMD Radeon RX 7800 XT AMD Radeon RX 7600 XT	16	✓	✓	✓	!	!	!	!
AMD Radeon RX 7900 XT	20	✓	✓	✓	✓	!	!	!
NVIDIA GeForce RTX 3090 NVIDIA GeForce RTX 4090 AMD Radeon 7900XTX	24	✓	✓	✓	✓	✓	!	!
NVIDIA H100 AMD Instinct MI250X AMD Instinct MI300A AMD Instinct MI300X	32 (or greater)	✓	✓	✓	✓	✓	✓	✓

https://huggingface.co/stabilityai/stable-diffusion-3.5-large-turbo

C5 - T5: Tasks

➔ You are free to use any stable diffusion model (SD 2.1, XL, turbo, etc.). Each has their own advantages and disadvantages (e.g., quality vs. sampling time trade-off)

	Subtask	Goals	Mark
Bare minimum	**a)** Install Stable Diffusion (SD), and play with 2.1, XL, turbo…	Using open-sourced models.	C
	b) Explore effects of ‘DDPM vs. DDIM’, ‘positive & negative prompting’, ‘strength of CFG’, ‘num. of denoising steps’, etc.	Exploration of inference with diffusion models.	
Good!	**c)** Identify a problem in your captioning model, and set your own goal / research question.	Analysis and problem statement.	B
	d) Generate synthetic samples to solve/mitigate your problem. LLMs can help automatizing the prompts generation.	Building a complex pipeline.	
Excellent!	**e)** Train / fine-tune your captioning model from last week, and analyze whether you reached your goal (YES or NO, both are valid, as long as you understand and explain **WHY**)	Example of an application of generative AI.	A

C5 - T5: Deliverable

Deliverable

- Github repository with readme.md (code explanation & instructions)
- Slides describing your findings/results in every task. ≥ 1 slides per task (a,b,c,d,e).
- One summary slide at the end of your presentation.

Mon. Apr. 13th	16:00-17:00	Generative models 3: Flow-matching	Alex Gómez-Villa	UAB	UB Room IA
Mon. Apr. 13th	17:00-18:00			UAB	
Mon. Apr. 13th	18:00-19:00	Project follow-up	E. Valveny/C. Boned/L. Kang/ J. Silveira	UAB/UB	
Wed. Apr. 15th	16:00-17:00	Graph Neural-Networks	Jordi Casas	UAB	UB Room IC (Hybrid)
Wed. Apr. 15th	17:00-18:00			UAB	
Mon. Apr. 20th	16:00-17:00	Human-centric recognition, affective, trustworthy AI	Julio Silveira Jacques	UB	UB Room IC
Mon. Apr. 20th	17:00-18:00			UB	
Mon. Apr. 20th	18:00-19:00	Project follow-up	J. Silveira Jacques	UB	

Due date

April 18th, **Saturday, 23:55**
(follow-up April 20th)
IC room